DocuSign Envelope ID: FF25B2EB-ED7E-4FC1-A774-BE5CE3924FE0

CITY OF CLAYTON
OLD 441 SOUTH CULVERT REPLACEMENT
ISSUE FOR BID

VICINITY MAP
NOT TO SCALE

CITY of CLAYTON
RABUN COUNTY, GA

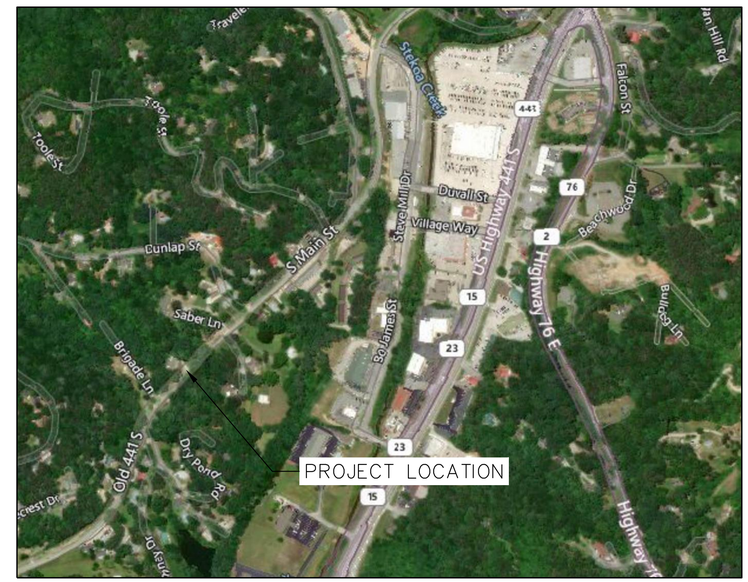

NORTH

LOCATION MAP
NOT TO SCALE

SHEET INDEX	
SHEET NUMBER	SHEET TITLE
G-0	COVER
C-1	CULVERT PLAN & PROFILE
C-2	CULVERT DETAILS I
C-3	CULVERT DETAILS II
C-4	CULVERT DETAILS III
C-5	CULVERT DETAILS IV
C-6	EROSION CONTROL DETAILS I

NOVEMBER 2021

FREESE AND NICHOLS

Georgia Registered Engineering Firm PEF-004433
Expires 06/30/2022

360 Interstate North Parkway, Suite 250
Atlanta, GA 30339
Phone – (404) 334-4310
Web – www.freese.com

REVISION BLOCK			
NO.	ISSUE	BY	DATE
0	ISSUE FOR BID	TMG	11/11/2021

GEORGIA REGISTERED PROFESSIONAL ENGINEER THOMAS MARSHALL GRAY
11/16/2021

ISSUED FOR BID

DocuSign Envelope ID: FF25B2EB-ED7E-4FC1-A774-BE5CE3924FE0

CONSTRUCTION NOTES:

1. START CULVERT CONSTRUCTION AT DOWNSTREAM END TO PROMOTE TIGHT CULVERT JOINTS.
2. LAY CONCRETE PIPE SECTIONS WITH THE SOCKET ENDS POINTING UPSTREAM.
3. JOIN SECTIONS USING RUBBER GASKETS INSTALLED ACCORDING TO GDOT STANDARD SPECIFICATIONS SUBSECTION 848.2.01 AND THE MANUFACTURER'S RECOMMENDATIONS.

ABBREVIATIONS

DB	DEED BOOK
EX	EXISTING
FES	FLARED END SECTION
FV	FIELD VERIFY
MIN	MINIMUM
PB	PLAT BOOK
PG	PAGE
RCP	REINFORCED CONCRETE PIPE

LEGEND

- PROPERTY LINE
- EDGE OF PAVEMENT
- SILT FENCE
- ROCK DAM (Rd)
- STAKED TURBIDITY CURTAIN (Tc)
- PUMPED DIVERSION (Dv2)
- CONTOUR
- RIP-RAP
- ASPHALT PAVEMENT PATCH

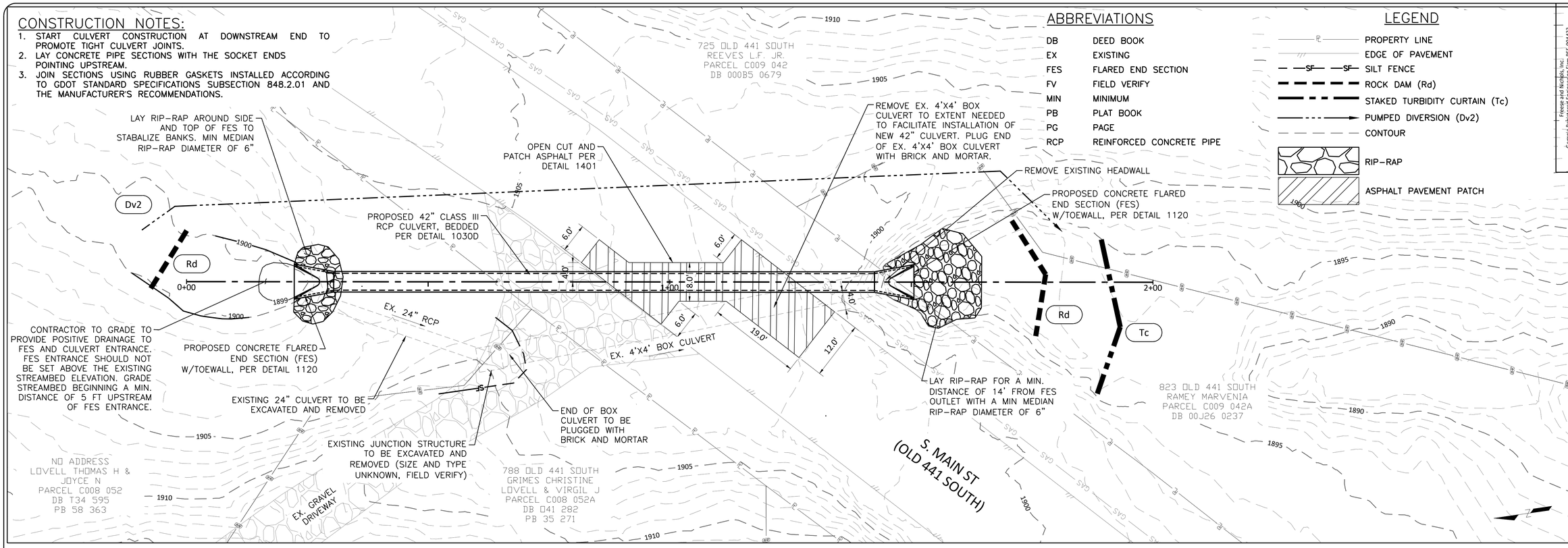

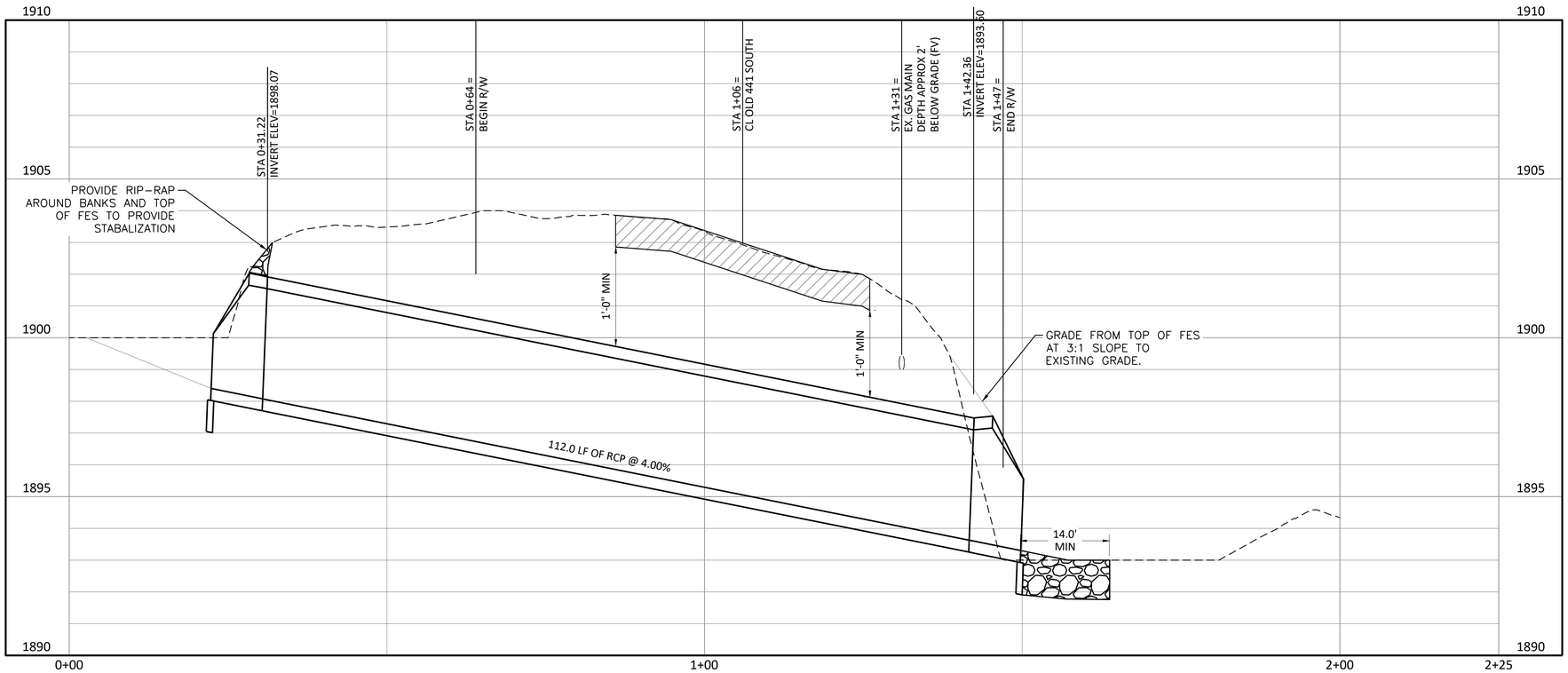

GENERAL NOTES:

1. ALL DATA SHOWN IS BASED OFF GIS DATA OBTAINED FROM PUBLIC RECORDS. NO SURVEY WAS COMPLETED FOR THIS PROJECT.
2. CONTRACTOR SHALL BE RESPONSIBLE FOR FIELD VERIFYING ALL LOCATIONS, DEPTHS, SIZES AND MATERIALS OF ALL UTILITIES WITHIN THE PROJECT VICINITY.
3. CONTRACTOR TO DETERMINE A PUMP AROUND OPERATION AND PROVIDE A DRAFT PLAN TO THE CITY FOR APPROVAL A MINIMUM OF TWO WEEKS PRIOR TO THE DESIRED IMPLEMENTATION DATE.
4. CONTRACTOR TO COORDINATE WITH CITY OF CLAYTON ON ROAD CLOSURE.
5. THE CULVERT SHALL UTILIZE CONCRETE FLARED END SECTIONS (FES) ON INLET AND OUTLET ENDS OF THE PROPOSED 42-INCH CULVERT.
6. CONTRACTOR TO PROVIDE SUFFICIENT EROSION CONTROL MEASURES TO PREVENT SEDIMENT TRANSPORT AND DEPOSITION OUTSIDE OF THE PROJECT SITE. ALL REQUIRED EROSION CONTROL MEASURES MAY NOT BE SHOWN, AND CONTRACTOR SHALL BE RESPONSIBLE FOR OBTAINING LAND DISTURBANCE PERMIT (IF REQUIRED) AND ADDING ADDITIONAL MEASURES AS NEEDED BASED UPON ACTUAL FIELD CONDITIONS, DRAINAGE PATTERNS, AND PERMIT REQUIREMENTS.

GEORGIA811 Utilities Protection Center, Inc. Know what's below. Call before you dig.

0 10' 20' 30' 60'
SCALE IN FEET

ISSUED FOR BID

Freese and Nichols, Inc.
Georgia Registered Engineering Firm PEF-004433

GEORGIA REGISTERED PROFESSIONAL ENGINEER No. PE045758 Tom Gray THOMAS MARSHALL GRAY
11/16/2021

FREESE AND NICHOLS
360 Interstate North Parkway, Suite 250
Atlanta, GA 30339
Phone - (404) 334-4310
Web - www.freese.com

CITY OF CLAYTON
OLD US-441 CULVERT REPLACEMENT
CIVIL
CULVERT PLAN & PROFILE

NO.	ISSUE	BY	DATE
0	ISSUE FOR BID	TMG	11/11/2021

FSAI JOB NO. CYG20163
DATE NOV 2021
DESIGNED KKP
DRAWN KKP
REVISED
CHECKED WRH
FILE NAME CV-PP.dwg

VERIFY SCALE 0 1
Bar is one inch on original drawing. If not one inch on this sheet, adjust scale.

SHEET C-1
SEQ. .

ACAD Rel: 24.0s (LMS Tech)
Filename: T:\2.0 STUDY\2.06 Old US-441 Culvert Replacement\DWG\Plan Sheets\CV-PP.dwg
Last Saved: 11/12/2021 4:46 PM Saved By: 03782
Plot Date: 11/16/2021 10:25 AM Plot By: 03826 Filename: T:\2.0 STUDY\2.06 Old US-441 Culvert Replacement\DWG\Plan Sheets\CV-PP.dwg

DocuSign Envelope ID: FF25B2EB-ED7E-4FC1-A774-BE5CE3924FE0

STATE	PROJECT NUMBER	SHEET NO.	TOTAL SHEETS
GA.			

NORMAL BACKFILL

BACKFILL, AS SHOWN BY THE BROKEN LINE SECTIONS, SHALL CONSIST OF PLACING COMPACTABLE SOIL IN 6" (LOOSE) LAYERS AND COMPACTING EACH LAYER (ACCORDING TO GEORGIA STANDARD SPECIFICATIONS) ON BOTH SIDES OF PIPE FOR ITS FULL LENGTH. MEASUREMENT AND PAYMENT WILL BE MADE UNDER ROADWAY EXCAVATION ITEMS FOR FORMATION OF EMBANKMENTS.

NORMAL EMBANKMENT SHALL BE PLACED A MINIMUM OF 12' WIDE ON EACH SIDE OF THE PIPE AND AT LEAST THE MIN. COVER OVER THE PIPE AND COMPACTED TO THE REQUIRED DENSITY BEFORE EQUIPMENT IS ALLOWED TO CROSS.

AFTER BACKFILL HAS BEEN COMPACTED, THE BALANCE OF THE FILL UP TO GRADE LINE SHALL BE CONSTUCTED IN ACCORDANCE WITH EMBANKMENT SPECIFICATIONS

LONGITUDINAL SECTION OF IMPERFECT TRENCH BACKFILL AND BACKFILL METHODS

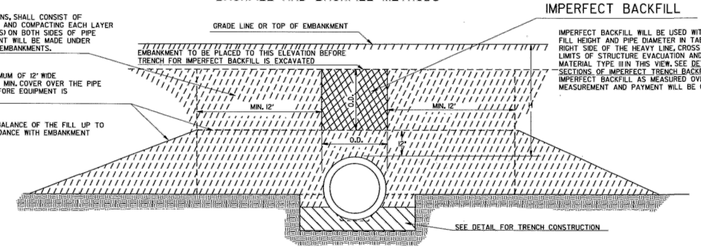

IMPERFECT BACKFILL

IMPERFECT BACKFILL WILL BE USED WITH CONCRETE PIPE IF FILL HEIGHT AND PIPE DIAMETER IN TABLE NO. 1 FALLS ON THE RIGHT SIDE OF THE HEAVY LINE. CROSS HATCHED AREA SHOWS LIMITS OF STRUCTURE EVACUATION AND IMPERFECT BACKFILL MATERIAL TYPE II IN THIS VIEW. SEE DETAILS BELOW CROSS SECTIONS OF IMPERFECT TRENCH BACKFILL FOR LIMITS OF IMPERFECT BACKFILL AS MEASURED OVER THE PIPE LENGTHWISE. MEASUREMENT AND PAYMENT WILL BE CONFINED TO THESE LIMITS.

MULTIPLE PIPE CULVERT SPACING

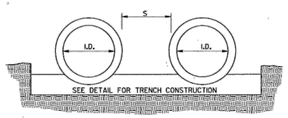

S=ONE INSIDE DIAMETER OF PIPE, OR 3 FEET, WHICHEVER IS SMALLER.
FOR PIPE ARCH CULVERTS, SUBSTITUTE SPAN FOR INSIDE DIAMETER.

NOTE:
FOR MULTIPLE LINES OF C.M. PIPE WITH METAL FLARED END SECTIONS, S MAY BE INCREASED ENOUGH TO AVOID OVERLAP OF END SECTION WINGTIPS. LOCATION OF METAL END SECTION SHOULD BE DETERMINED BEFORE PLACEMENT OF PIPE.

CROSS SECTIONS OF IMPERFECT TRENCH BACKFILL

CROSS HATCHED AREAS SHOW LIMITS OF CONSTRUCTION & MEASUREMENT FOR STRUCTURE EXCAVATION & IMPERFECT TRENCH BACKFILL MATERIAL, TYPE III

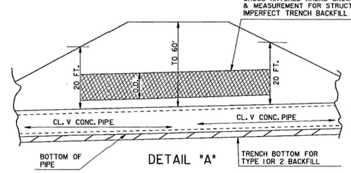

DETAIL "A"

(FOR CONCRETE PIPE DIAMETERS 78" & 84", WITH FILL HEIGHTS OVER 20 FT.)

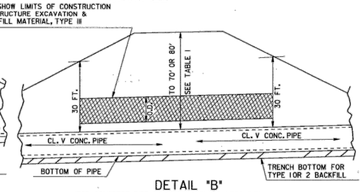

DETAIL "B"

(FOR CONCRETE PIPE DIAMETERS 72" AND LESS WITH FILL HEIGHTS OVER 30 FT.)

TRENCH CONSTRUCTION FOR SIDE DRAIN

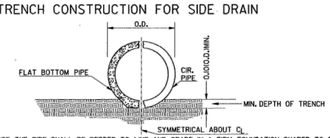

NOTE: THE PIPE SHALL BE BEDDED TO LINE AND GRADE IN A FIRM FOUNDATION SHAPED TO FIT THE LOWER PART OF THE PIPE EXTERIOR. WHERE ROCK EXISTS, EXCAVATE AND BACKFILL WITH COMPRESSABLE MATERIAL (UNCLASSIFIED EXCAVATION) A MINIMUM OF 6" BELOW THE PIPE.

DETAIL SHOWING MINIMUM COVER FOR PIPE CULVERTS

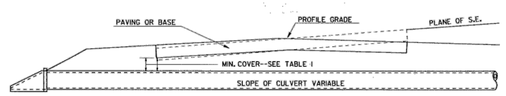

TRENCH CONSTRUCTION FOR STORM DRAIN.

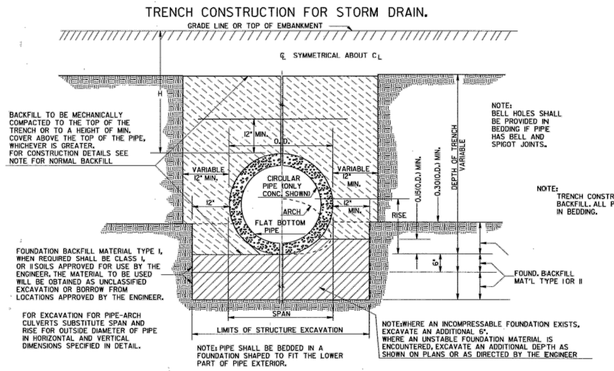

NOTE:
BELL HOLES SHALL BE PROVIDED IN BEDDING IF PIPE HAS BELL AND SPIGOT JOINTS.

NOTE:
TRENCH CONSTRUCTION IS REQUIRED FOR BOTH NORMAL OR IMPERFECT BACKFILL. ALL PIPES WITH BELL & SPIGOT JOINTS SHALL HAVE BELL HOLES IN BEDDING.

FOUNDATION BACKFILL MATERIAL TYPE I, WHEN REQUIRED SHALL BE CLASS I, OR II SOILS APPROVED FOR USE BY THE ENGINEER. THE MATERIAL TO BE USED WILL BE OBTAINED AS UNCLASSIFIED EXCAVATION OR BORROW FROM LOCATIONS APPROVED BY THE ENGINEER.

FOR EXCAVATION FOR PIPE-ARCH CULVERTS SUBSTITUTE SPAN AND RISE FOR OUTSIDE DIAMETER OF PIPE IN HORIZONTAL AND VERTICAL DIMENSIONS SPECIFIED IN DETAIL.

NOTE: PIPE SHALL BE BEDDED IN A FOUNDATION SHAPED TO FIT THE LOWER PART OF PIPE EXTERIOR.

NOTE: WHERE AN INCOMPRESSABLE FOUNDATION EXISTS, EXCAVATE AN ADDITIONAL 6". WHERE AN UNSTABLE FOUNDATION MATERIAL IS ENCOUNTERED, EXCAVATE AN ADDITIONAL DEPTH AS SHOWN ON PLANS OR AS DIRECTED BY THE ENGINEER

NOTE:

1. FOR FILL HEIGHT TABLES SEE SHEET 2 OF 3 AND SHEET 3 OF 3.
2. ONLY ONE CLASS OR THICKNESS OF PIPE WILL BE SPECIFIED FOR EACH INDIVIDUAL LOCATION. THE CLASS OR THICKNESS WILL BE DETERMINED BY THE MAXIMUM HEIGHT OF FILL.

REVISION	DATE	BY

DEPARTMENT OF TRANSPORTATION
STATE OF GEORGIA

STANDARD
CONCRETE & METAL PIPE CULVERTS
SHEET 1 OF 3
(TRENCH CONSTRUCTION, BEDDING, BACKFILLING)

NO SCALE — REV. & REDR.: SEPT., 2001

DES. ___ DRW. ___ TRA. ___ CHK. ___

(SUBMITTED) STATE ROAD & AIRPORT DESIGN ENGR.
(APPROVED) CHIEF ENGINEER

NUMBER 1030D

Freese and Nichols, Inc.
Georgia Registered Engineering Firm PEF-004433

GEORGIA REGISTERED PROFESSIONAL ENGINEER No. PE043738 THOMAS MARSHALL GRAY
11/16/2021

FREESE AND NICHOLS
360 Interstate North Parkway, Suite 250
Atlanta, GA 30339
Phone - (404) 334-4310
Web - www.freese.com

CITY OF CLAYTON
OLD US-441 CULVERT REPLACEMENT
CIVIL
CULVERT DETAILS I

NO.	ISSUE	BY	DATE
0	ISSUE FOR BID	TMG	11/11/2021

F&N JOB NO. CYG20163
DATE NOV 2021
DESIGNED KKP
DRAWN KKP
REVIEWED
CHECKED WRH
FILE NAME CV-DTLS-1.dwg

VERIFY SCALE 0 1
Bar is one inch on original drawing. If not one inch on this sheet, adjust scale.

SHEET C-2
SEQ.

ISSUED FOR BID

ACAD Rel: 24.0s (LMS Tech)
Filename: T:\2.0 STUDY\2.06 Old US-441 Culvert Replacement\DWG\Plan Sheets\CV-DTLS-1.dwg
Last Saved: 11/11/2021 10:40 AM Saved By: 03826
Plot Date: 11/11/2021 1:07 PM Plot By: 03826 Filename: T:\2.0 STUDY\2.06 Old US-441 Culvert Replacement\DWG\Plan Sheets\CV-DTLS-1.dwg

ACAD Rel: 24.0s (LMS Tech)
Filename: T:\2.0 STUDY\2.06 Old US-441 Culvert Replacement\DWG\Plan Sheets\CV-DTLS-1.dwg
Last Saved: 11/11/2021 10:40 AM Saved By: 03826

DocuSign Envelope ID: FF25B2EB-ED7E-4FC1-A774-BE5CE3924FE0

Plot Date: 11/11/2021 1:07 PM Plot By: 03826 Filename: T:\2.0 STUDY\2.06 Old US-441 Culvert Replacement\DWG\Plan Sheets\CV-DTLS-1.dwg

TABLE NO. I ROUND PIPE - CONCRETE - CORRUGATED STEEL - CORRUGATED ALUMINUM

MINIMUM CLASS OF CONCRETE OR MINIMUM THICKNESS OF STEEL AND ALUMINUM

PIPE DIAMETER (INCHES)	TYPE	MINIMUM COVER (INCHES)	HEIGHT OF FILL IN FEET ABOVE TOP OF PIPE												PIPE DIAMETER (INCHES)
			1 - 10	10 - 15	15 - 20	20 - 25	25 - 30	30 - 35	35 - 40	40 - 50	50 - 60	60 - 70	70 - 80	80 - 90	
12	CONCRETE	12	III	III	IV	V	V	V	V	V	V	V	V		12
	STEEL 1	12	.064	.064	.064	.064	.064	.064	.064	.064	.064	.064	.064	.064	
	ALUM 1	12	.060	.060	.060	.060	.075	.075	.075	.075	.075	.075	.075	.075	
15	CONCRETE	12	III	III	IV	V	V	V	V	V	V	V	V		15
	STEEL 1	12	.064	.064	.064	.064	.064	.064	.064	.064	.064	.064	.064	.064	
	ALUM 1	12	.060	.060	.060	.060	.075	.075	.075	.075	.075	.075	.075	.105	
18	CONCRETE	12	III	III	IV	V	V	V	V	V	V	V	V		18
	STEEL 1	12	.064	.064	.064	.064	.064	.064	.064	.064	.064	.064	.064	.064	
	ALUM 1	12	.060	.060	.060	.060	.075	.075	.075	.075	.105	.105	.105	.105	
24	CONCRETE	12	III	III	IV	V	V	V	V	V	V	V	V		24
	STEEL 1	12	.064	.064	.064	.064	.064	.064	.064	.064	.064	.064	.079	.079	
	ALUM 1	12	.060	.060	.060	.075	.075	.075	.075	.105	.105	.105	.105		
30	CONCRETE	12	III	III	IV	V	V	V	V	V	V	V	V		30
	STEEL 1	12	.064	.064	.064	.064	.064	.064	.064	.064	.079	.079	.109	.109	
	ALUM 1	12	.075	.075	.075	.075	.075	.105	.105	.105	.135	.135			
36	CONCRETE	12	III	III	IV	V	V	V	V	V	V	V	V		36
	STEEL 1	12	.064	.064	.064	.064	.064	.064	.064	.079	.079	.109	.109	.138	
	STEEL 2	12	.064	.064	.064	.064	.064	.064	.064	.064	.079	.079	.109	.109	
	ALUM 1	12	.075	.105	.105	.105	.105	.105	.135	.135	.135	.135			
	ALUM 2	12	.060	.060	.060	.060	.075	.075	.105	.105	.105	.135			
42	CONCRETE	12	III	III	IV	V	V	V	V	V	V	V	V		42
	STEEL 1	12	.064	.064	.064	.064	.064	.064	.064	.079	.109	.109	.138	.138	
	STEEL 2	12	.064	.064	.064	.064	.064	.064	.064	.079	.109	.109	.109	.138	
	ALUM 1	12	.105	.105	.135	.135	.164	.164							
	ALUM 2	12	.060	.060	.060	.075	.075	.105	.105	.105	.135	.135			
48	CONCRETE	12	III	III	IV	V	V	V	V	V	V	V	V		48
	STEEL 1	12	.064	.064	.064	.064	.064	.064	.079	.109	.109	.138	.138	.168	
	STEEL 2	12	.064	.064	.064	.064	.064	.064	.064	.079	.109	.109	.138	.138	
	ALUM 1	12	.105	.105	.135	.164	.164	.164							
	ALUM 2	12	.060	.060	.060	.075	.075	.105	.105	.135	.135	.164	.164		
54	CONCRETE	12	III	III	IV	V	V	V	V	V	V	V	V		54
	STEEL 1	12	.079	.079	.079	.079	.079	.079	.079	.109	.138	.138	.168		
	STEEL 2	12	.064	.064	.064	.064	.064	.064	.079	.109	.109	.138	.138	.168	
	ALUM 1	15	.105	.105	.135	.164	.164	.164							
	ALUM 2	15	.060	.060	.060	.075	.075	.105	.135	.135	.164	.164			
60	CONCRETE	12	III	III	IV	V	V	V	V	V	V	V	V		60
	STEEL 1	12	.109	.109	.109	.109	.109	.109	.109	.109	.138	.168			
	STEEL 2	12	.064	.064	.064	.064	.064	.079	.079	.109	.138	.138	.168	.168	
	ALUM 1	15	.135	.135	.164	.164	.164	.164							
	ALUM 2	15	.060	.060	.075	.105	.105	.135	.135	.164	.164				
66	CONCRETE	12	III	III	IV	V	V	V	V	V	V	V			66
	STEEL 1	12	.138	.138	.138	.138	.138	.138	.138	.138	.168	.168			
	STEEL 2	12	.064	.064	.064	.064	.064	.079	.109	.109	.138	.168	.168		
	ALUM 1	18	.164	.164	.164	.164	.164								
	ALUM 2	18	.075	.075	.105	.105	.135	.135	.164	.164					
72	CONCRETE	12	III	III	IV	V	V	V	V	V	V	V			72
	STEEL 1	12	.138	.138	.138	.138	.138	.138	.138	.138	.168				
	STEEL 2	12	.064	.064	.064	.064	.079	.109	.109	.138	.138	.168			
	ALUM 1	18	.164	.164	.164	.164	.164								
	ALUM 2	18	.075	.075	.105	.105	.135	.164	.164	.164					
78	CONCRETE	12	III	III	IV	V	V	V	V	V	V				78
	STEEL 1	15	.168	.168	.168	.168	.168	.168	.168	.168					
	STEEL 2	15	.064	.064	.064	.064	.079	.109	.109	.138	.168	.168			
	ALUM 2	21	.075	.075	.105	.105	.135	.164	.164						
84	CONCRETE	12	III	III	IV	V	V	V	V	V	V				84
	STEEL 1	15	.168	.168	.168	.168	.168	.168	.168	.168					
	STEEL 2	15	.064	.064	.064	.079	.079	.109	.109	.138	.168				
	ALUM 2	21	.105	.105	.105	.135	.135	.164	.164						
90	CONCRETE	12	III	III											90
	STEEL 2	18	.064	.064	.064	.079	.109	.109	.138	.138	.168				
	ALUM 2	24	.105	.105	.135	.135	.164								
96	CONCRETE	12	III	III											96
	STEEL 2	18	.079	.079	.079	.079	.109	.109	.138	.168					
	ALUM 2	24	.105	.105	.135	.135	.164								
102	CONCRETE	12	III	III											102
	STEEL 2	24	.079	.079	.079	.109	.109	.138	.138	.168					
	ALUM 2	24	.135	.164	.164										
108	CONCRETE	12	III	III											108
	STEEL 2	24	.109	.109	.109	.109	.109	.138	.138	.168					
	ALUM 2	24	.135	.164											
114	CONCRETE														114
	STEEL 2	24	.109	.109	.109	.109	.109	.138	.168						
	ALUM 2	24	.164	.164											
120	CONCRETE														120
	STEEL 2	24	.109	.109	.109	.109	.138	.138	.168						
	ALUM 2	24	.164	.164											

IMPERFECT BACKFILL IS NOT REQUIRED FOR CONDTIONS SHOWN ON THE LEFT SIDE OF THE HEAVY LINE. USE NORMAL BACKFILL.

FOR CONDITIONS TO THE RIGHT OF THE HEAVY LINE, CLASS V CONCRETE PIPE REQUIRES IMPERFECT BACKFILL ACCORDING TO DETAIL "A" OR "B" ON SHEET 1 OF 3.

TABLE NO. 3-(INFORMATION ONLY)

	COR. METAL THICKNESS	EQUIVALENT GAGE
STEEL	.064	16
	0.079	14
	0.109	12
	0.138	10
	0.168	8
ALUMINUM	0.060	16
	0.075	14
	0.105	12
	0.135	10
	0.164	8

STEEL 1 OR ALUM 1 DENOTES CORRUGATION PROFILE 2 2/3" X 1/2"

STEEL 2 OR ALUM 2 DENOTES CORRUGATION PROFILE 3" X 1" (OR 5" X 1" FOR STEEL PIPE ONLY)

ALL STEEL AND ALUMINUM PIPE SHALL BE LOCK-SEAM OR WELDED-SEAM (HELICAL) CONSTRUCTION.

MINIMUM COVER VALUES APPLY TO HS-20 LIVE LOAD. MINIMUM COVER NEEDED FOR CONSTRUCTION VEHICLES MAY BE GREATER AND IS THE RESPONSIBILITY OF THE CONTRACTOR.

TRENCH CONSTRUCTION IS REQUIRED FOR CONDITIONS ON BOTH SIDES OF HEAVY LINE. SEE SHEET 1 OF 3.

FOR CONDITIONS TO RIGHT OF HEAVY LINE, CONCRETE PIPE REQUIRES IMPERFECT BACKFILL ACCORDING TO SPECIFICATIONS AND THIS STANDARD.

TABLE VALUES FOR ALUMINUM CORRUGATED PIPE (OR ALUMINUM SPIRAL RIB PIPE) ARE COMPUTED BASED UPON ALCLAD ALLOY 3004-H34 HAVING MINIMUM YIELD STRENGTH, fy=24,000 PSI. IF ALUMINUM PIPE IS OTHERWISE FURNISHED AS 3004-H32 (fy=20,000 PSI), THE TABLE NO. 1 ALLOWABLE FILL HEIGHTS SHALL BE ADJUSTED AS FOLLOWS:

A. ALL MINIMUM COVER VALUES SHALL BE INCREASED BY 15 PERCENT. (EXAMPLE: 12 INCHES BECOMES 13.8 INCHES)
B. ALL HEIGHT OF FILL VALUES SHALL BE DECREASED BY 15 PERCENT. (EXAMPLE: 35-40 FEET BECOMES 29.7-34.0 FEET)

STATE	PROJECT NUMBER	SHEET NO.	TOTAL SHEETS
GA.			

BY	REVISION	DATE
	GEN. REV. NOTES	9-26-01
GJP	ADDED SEAM CONST. NOTE	3-9-99

DEPARTMENT OF TRANSPORTATION
STATE OF GEORGIA

STANDARD
CONCRETE & METAL PIPE CULVERTS
SHEET 2 OF 3
(FILL HEIGHTS FOR CONCRETE & CORRUGATED METAL PIPE)

NO SCALE OCTOBER 21, 1998

DES. ___ DRW. ___ TRA. ___ CHK. ___
(SUBMITTED) STATE ROAD & AIRPORT DESIGN ENGR.
(APPROVED) CHIEF ENGINEER

NUMBER 1030D

ISSUED FOR BID

NO.	ISSUE	BY	DATE
0	ISSUE FOR BID	TMG	11/11/2021

F&N JOB NO. CYG20163
DATE NOV 2021
DESIGNED KKP
DRAWN KKP
REVISED
CHECKED WRH
FILE NAME CV-DTLS-1.dwg

VERIFY SCALE 0 1 — Bar is one inch on original drawing. If not one inch on this sheet, adjust scale.

CITY OF CLAYTON
OLD US-441 CULVERT REPLACEMENT
CIVIL
CULVERT DETAILS II

SHEET C-3
SEQ.

FREESE NICHOLS
360 Interstate North Parkway, Suite 250
Atlanta, GA 30339
Phone - (404) 334-4310
Web - www.freese.com

Freese and Nichols, Inc.
Georgia Registered Engineering Firm PEF-004433

GEORGIA REGISTERED PROFESSIONAL ENGINEER THOMAS MARSHALL GRAY
11/16/2021

DocuSign Envelope ID: FF25B2EB-ED7E-4FC1-A774-BE5CE3924FE0

9/6/2006 9:44:21 AM \\GDOT-DSN1\GOPLOT\QCF\go_tiff_output.qcf gowens M:\GARY\REVISED 1120\1120.prf GO-RD6

STATE	PROJECT NUMBER	SHEET NO.	TOTAL SHEETS
GA.			

CONCRETE FLARED END SECTION

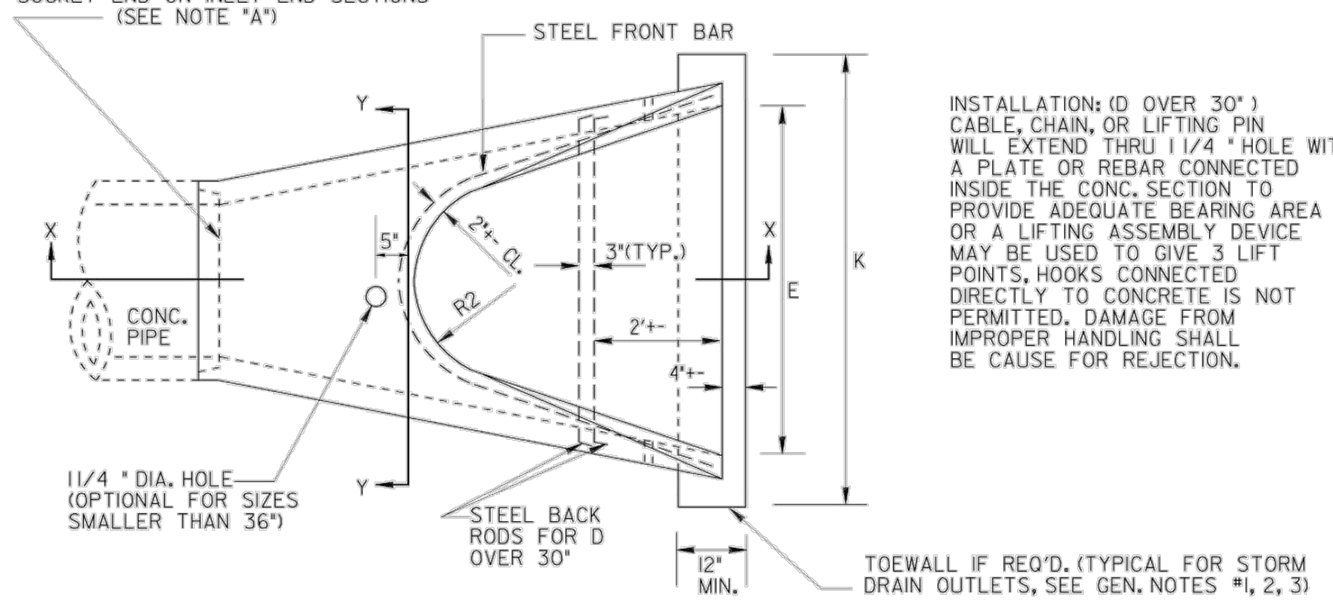

PLAN

INSTALLATION: (D OVER 30") CABLE, CHAIN, OR LIFTING PIN WILL EXTEND THRU 1 1/4 " HOLE WITH A PLATE OR REBAR CONNECTED INSIDE THE CONC. SECTION TO PROVIDE ADEQUATE BEARING AREA OR A LIFTING ASSEMBLY DEVICE MAY BE USED TO GIVE 3 LIFT POINTS, HOOKS CONNECTED DIRECTLY TO CONCRETE IS NOT PERMITTED. DAMAGE FROM IMPROPER HANDLING SHALL BE CAUSE FOR REJECTION.

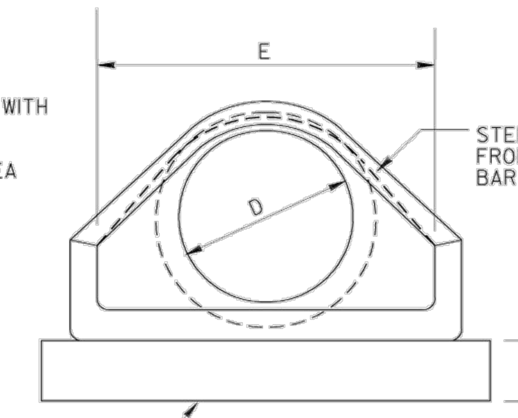

FRONT

NOTE: DO NOT CUT CONCRETE PIPE. USE FULL LENGTH SECTIONS ONLY. WARP SLOPE TO CONFORM WITH PIPE LENGTH AND END SECTION.

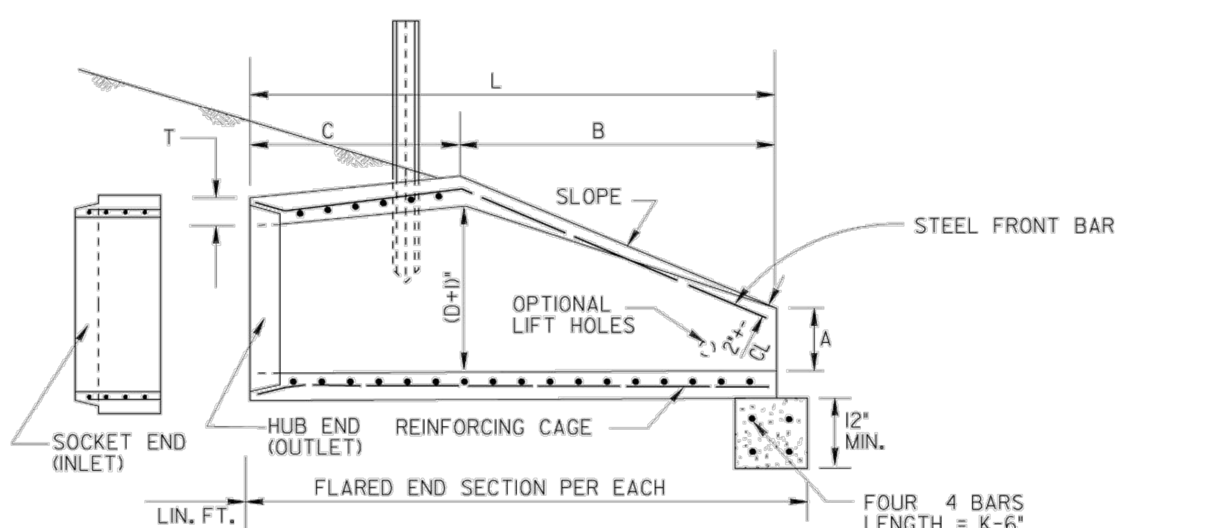

SECTION X-X

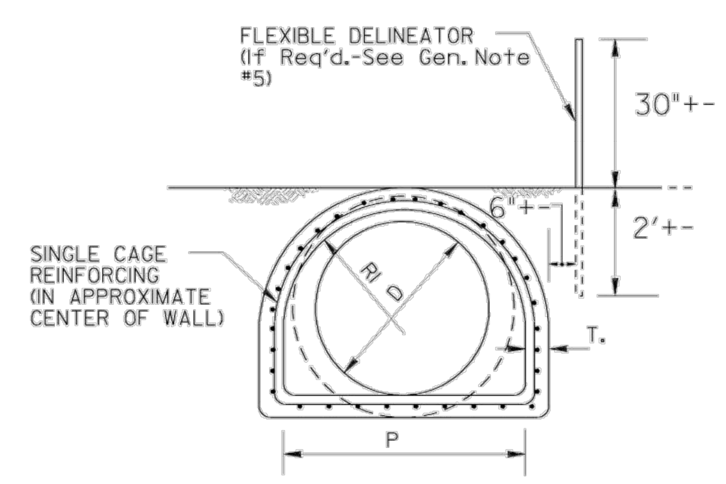

SECTION Y-Y

REINFORCING CAGE:

(1.) WIRE FABRIC HAVING EQUAL STEEL AREA AS INNER CAGE FOR CLASS II PIPE, AASHTO M-170.
(2.) ALTERNATE: # 3 BARS SPACED 12"+- LONGITUDINALLY WITH # 2 BARS TRANVERSELY AT 6" O.C. MAX. SPACING, SPOT WELDED OR TIED TO FORM CAGE. (BACK RODS MAY BE OMITTED.)

NOTE "A":

CONTRACTOR WILL INFORM PRODUCER IF CONCRETE FLARED END SECTION IS FOR INLET OR FOR OUTLET END. SOCKET (TONGUE OR SPIGOT) END IS REQUIRED FOR INLETS. HUB (GROOVE OR BELL) END IS REQUIRED FOR OUTLETS. SOCKET TO SOCKET OR HUB TO HUB JOINT WILL NOT BE ACCEPTED UNLESS A REINFORCED CONCRETE COLLAR IS BUILT AROUND THE JOINT WITH NO PAYMENT BEING MADE FOR THE COLLAR.

FLARED END SECTIONS SHALL BE JOINTED TO PIPE WITH ALL SPACE IN THE JOINT FILLED WITH EITHER BITUMINOUS PLASTIC CEMENT OR PREFORMED PLASTIC GASKET (SEC. 848).

WALL THICKNESS (T) IS SHOWN AS NOMINAL AND MAY BE INCREASED AT PRODUCER'S OPTION FOR DESIRED JOINT DESIGN OR TO ALLOW A FLAT OUTSIDE BOTTOM ON THE FLARE, WITH INSIDE DIMENSIONS OF FLARE RETAINED AS SHOWN.

T = PIPE WALL THICKNESS (0.0833D + 1"+- TYPICAL)

DIMENSIONS AND REINFORCING FOR CONCRETE FLARED END SECTIONS (+- 1" TOLERANCE)												OUTLET TOEWALL (IF REQ'D)	
PIPE DIA	FRONT BAR	BACK RODS	SLOPE +-	A	B	C *	L *	E	P	R1	R2	K= E + 2'	CU.YDS. CONC.
12"	1-#3 x 5' 4"	NOT REQ'D.	2.2:1	4"	2'0"	4' 1"	6'1"	2'0"	1'8"	10"	9"	4'-0"	.148
15"	1-#3 x 6' 0"	NOT REQ'D.	2.2:1	6"	2'3"	3'10"	6'1"	2'6"	2'0"	1'0"	11"	4'-6"	.167
18"	1-#3 x 7' 2"	NOT REQ'D.	2.2:1	9"	2'3"	3'10"	6'1"	3'0"	2'5"	1'4"	1'0"	5'-0"	.185
24"	1-#3 x 9' 10"	NOT REQ'D.	2.4:1	10"	3'8"	2' 6"	6'2"	4'0"	2'9"	1'5"	1'2"	6'-0"	.222
30"	1-#4 x 11' 8"	NOT REQ'D.	2.4:1	12"	4'6"	1' 8"	6'2"	5'0"	3'1"	1'6"	1'3"	7'-0"	.259
36"	1-#4 x 13' 10"	2-#4 x 6'3"	2.4:1	15"	5'3"	2'11"	8'2"	6'0"	4'0"	2'0"	1'8"	8'-0"	.296
42"	1-#4 x 13' 10"	2-#4 x 7'4"	2.4:1	21"	5'3"	2'11"	8'2"	6'6"	4'6"	2'4"	1'10"	8'-6"	.315

NOTE: SPECIFIED REINFORCING IS MINIMAL AND MAY BE INCREASED AT PRODUCERS OPTION TO AID CASTING & HANDLING. ALTERNATE REINFORCEMENT PERMITTED IF APPROVED.

* NOTE: "C" AND "L" DIMENSION MAY BE MEASURED TO EITHER END OF JOINT CONNECTION AT PIPE.

METAL FLARED END SECTION

(USE ONLY WITH COR. METAL PIPE)

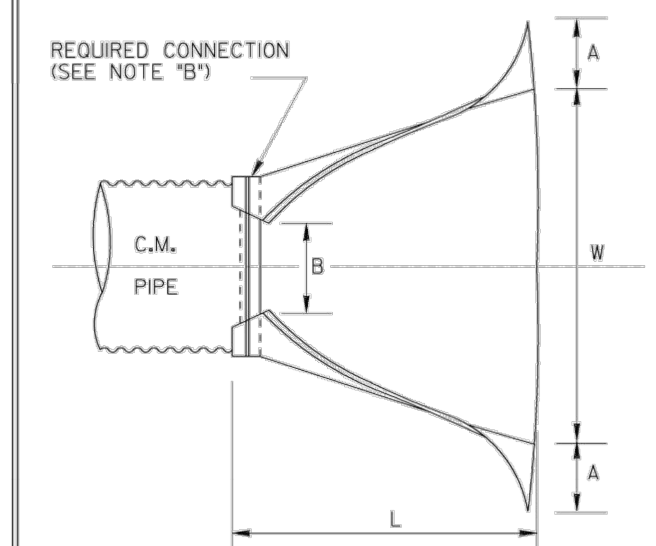

PLAN

NOTE: GALVANIZED STEEL FLARED END SECTIONS ARE TO BE USED ONLY WITH CORRUGATED STEEL PIPE AND ALUMINUM FLARED END SECTIONS ARE TO BE USED ONLY WITH CORRUGATED ALUMINUM PIPE UNLESS OTHERWISE APPROVED BY D.O.T. OFFICE OF MATERIALS AND TESTS.

FLARED END SECTION DIMENSIONS							
PIPE SIZE "D"	THICKNESS		A	B	H	L	W
	GALV. STEEL	ALUM.	A= 0.4D +- 1"	B=0.5 D +- 1"	H=0.25D +- 1" (MIN.6")	L=1.67D +- 1½"	W=2.0D +- 2"
12"	.064"	.060"	5"	6"	6"	1'8"	2'0"
15"	.064"	.060"	6"	7"	6"	2'3"	2'6"
18"	.064"	.060"	7"	9"	6"	2'6"	3'0"
24"	.064"	.060"	9"	1'0"	6"	3'4"	4'0"
30"	.079"	.105"	1'0"	1'3"	7"	4'2"	5'0"
36"	.079"	.105"	1'2"	1'6"	9"	5'0"	6'0"
42"	.109"	.164"	1'5"	1'9"	10"	5'10"	7'0"

NOTE: WHERE METAL FLARED END SECTIONS ARE USED WITH MULTIPLE PIPE LINES, THE STANDARD SPACING BETWEEN PIPES (S=D OR 3 FT.) MAY HAVE TO BE INCREASED (S=1.75 D TYPICAL). TO PREVENT OVER-LAP OF END SECTION WINGTIPS. SEE ALSO STD. 1030D.

NOTE: SLOPE DRAIN PIPES WILL REQUIRE AN ELBOW FOR CONNECTION TO THE FLARED END SECTION. PAYMENT FOR SLOPE DRAIN PIPE WILL INCLUDE THIS ELBOW.

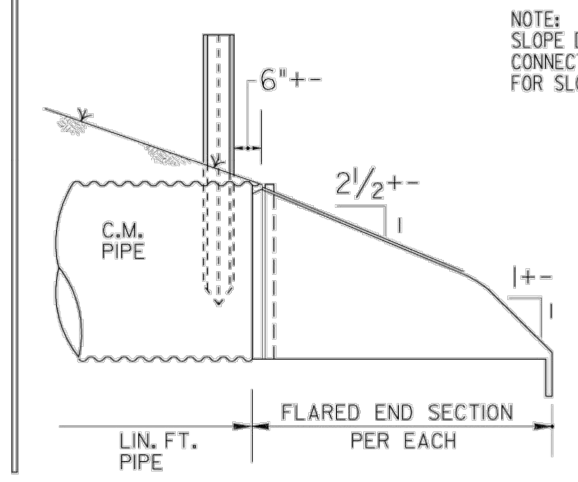

SIDE

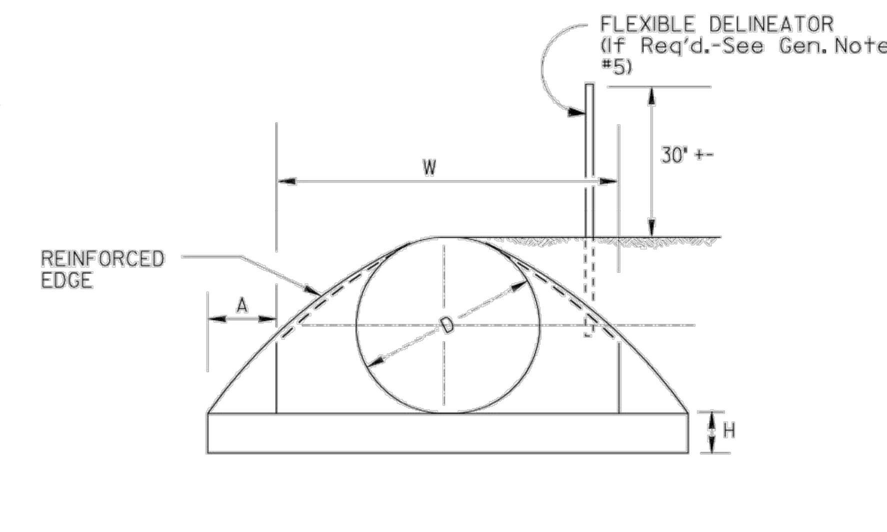

FRONT

NOTE "B":

THE CONNECTION BETWEEN METAL FLARED END SECTION AND C.M. PIPE WILL BE ONE OF THE FOLLOWING:

(a) A STRAP BAND OR THREADED ROD PROVIDED BY THE MANUFACTURER WILL LOCK END SECTION ONTO PIPE. A CORRUGATION AT THE PIPE AND WILL BE NON-SPIRALED (PERPENDICULAR TO CL OF PIPE)

(b) A DIMPLE BAND COLLAR WILL BE SHOP BOLTED TO END SECTION. PIPE WILL BE INSERTED INTO BAND COLLAR TO MEET THE END SECTION.

(c) A STUB PIPE WILL BE RIVITED TO THE END SECTION AND THE MAIN PIPE CONNECTED TO THE STUB WITH A NORMAL CONNECTING BAND.

(d) OTHER TYPE CONNECTION IF RECOMMENDED BY MANUFACTURER AND APPROVED BY THE D.O.T.

SPECIAL NOTE:

FLARED END SECTIONS ARE NORMALLY LIMITED TO USE OUTSIDE THE CLEAR ZONE OR BEHIND BARRIER AND WHERE HYDRAULICS PERMIT. SEE OTHER STANDARDS OR DETAILS FOR TAPERED HEADWALLS, SAFETY SLOPE END SECTIONS OR OTHER PIPE END STRUCTURES.

GENERAL NOTES :

1. TOEWALLS ARE REQ'D. FOR OUTLETS OF CONC. STORM DRAINS, EXCEPT WHERE DITCH PAVING OR OTHER EROSION PROTECTION IS PROVIDED OR WHERE THE OUTLET VELOCITY IS LESS THAN 8 FT/SEC. TOEWALLS ARE NOT REQUIRED FOR SIDE DRAINS, SLOPE DRAINS OR INLETS OF STORM DRAINS THIS CRITERIA MAY BE VARIED WHERE SPECIFIED BY THE DESIGNER OR THE ENGINEER.

2. TOEWALLS WILL BE PAID FOR AS CU. YDS. OF CLASS "A" OR "B" CONCRETE. CONTRACTOR MAY ELECT TO CONSTRUCT TOE WALL WITH SAND CEMENT BAG RIPRAP OR STONE RIPRAP TO SAME MINIMUM DIMENSIONS WITH NO ADDITIONAL PAYMENT.

3. PRECAST TOEWALLS SHALL BE CL. "A" CONCRETE; CAST-IN-PLACE TOEWALLS MAY BE CL "A" OR "B" CONCRETE AND MAY BE TRENCH FORMED. WHERE PLANS ITEMIZE ONE CLASS OF CONCRETE AND CONTRACTOR ELECTS TO USE OTHER CLASS, NO ADDITIONAL PAYMENT IS MADE. NO PAYMENT IS MADE FOR STEEL IN TOEWALL.

4. CENTERLINE OF FLARED END SECTION WILL ALIGN WITH CENTERLINE OF PIPE, IF PIPE IS SKEWED, THE EMBANKMENT SLOPE WILL BE WARPED TO CONFORM WITH END SECTION.

5. FLEXIBLE DELINEATORS SHALL BE REQUIRED AT CROSS DRAIN FLARED END SECTIONS, BOTH INLET AND OUTLET. PAYMENT FOR FLARED END SECTION WILL INCLUDE DELINEATORS, SEE DETAIL AND NOTES BELOW. DELINEATORS NOT REQ'D. FOR SIDE DRAIN, SLOPE DRAIN, OR LONG PIPE.

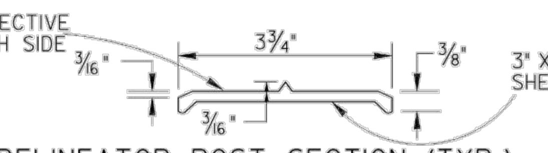

DELINEATOR POST SECTION (TYP.)

NOTE:
DELINEATOR POST SHALL CONFORM TO SEC. 911 FOR FLEXIBLE DELINEATOR POST EXCEPT REFLECTIVE SHEETING IS NOT REQUIRED AND LENGTH IS 4'-6" FROM TOP TO BOTTOM POINT. ALTERNATES PERMITTED IF APPROVED BY D.O.T. LABORATORY.

SPECIAL NOTE :
PIPE SIZES (D) ARE "NOMINAL-MINIMUM" INSIDE DIAMETERS IN ACCORDANCE WITH GEORGIA STANDARD FOR PIPE CULVERTS. "D" DIMENSION FOR FLARED END SECTION SHALL EQUAL THE "D" DIMENSION FOR CONNECTING PIPE CULVERT.

REVISION	DATE
REV. REFLECTIVE SHEETING	6-9-06
GLO	BY

DEPARTMENT OF TRANSPORTATION
STATE OF GEORGIA

STANDARD
FLARED END SECTIONS
FOR PIPES

NO SCALE — REV. & REDR. SEPT., 1999

DES. ____ REV. ____ RETR. ____ CHK. ____
(SUBMITTED) [signature] STATE ROAD & AIRPORT DESIGN ENGINEER
(APPROVED) [signature] CHIEF ENGINEER

NUMBER 1120

9/6/2006 9:44:21 AM \\GDOT-DSN1\GOPLOT\QCF\go_tiff_output.qcf gowens M:\GARY\REVISED 1120\1120.prf GO-RD6

Freese and Nichols, Inc.
Georgia Registered Engineering Firm PEF-004433

GEORGIA REGISTERED PROFESSIONAL ENGINEER
THOMAS MARSHALL GRAY
11/16/2021

FREESE NICHOLS
360 Interstate North Parkway, Suite 250
Atlanta, GA 30339
Phone - (404) 334-4310
Web - www.freese.com

CITY OF CLAYTON
OLD US-441 CULVERT REPLACEMENT
CIVIL
CULVERT DETAILS III

NO.	ISSUE	BY	DATE
0	ISSUE FOR BID	TMG	11/11/2021

FNI JOB NO. CYG20163
DATE NOV 2021
DESIGNED KKP
DRAWN KKP
REVISED
CHECKED WRH
FILE NAME CV-DTLS-1.dwg

VERIFY SCALE
0 — 1
Bar is one inch on original drawing. If not one inch on this sheet, adjust scale.

SHEET C-4
SEQ.

ISSUED FOR BID

ACAD Rel: 24.0s (LMS Tech)
Filename: T:\2.0 STUDY\2.06 Old US-441 Culvert Replacement\DWG\Plan Sheets\CV-DTLS-1.dwg
Last Saved: 11/11/2021 10:40 AM Saved By: 03826

DocuSign Envelope ID: FF25B2EB-ED7E-4FC1-A774-BE5CE3924FE0

STATE	PROJECT NUMBER	SHEET NO.	TOTAL SHEETS
GA.			

STORM DRAIN AND UTILITY INSTALLATION BY OPEN CUT - GENERAL

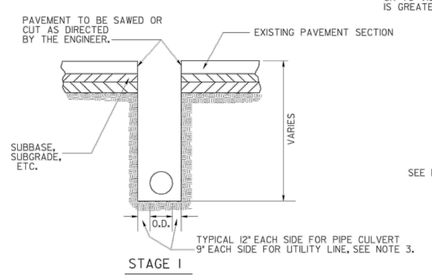

STAGE 1

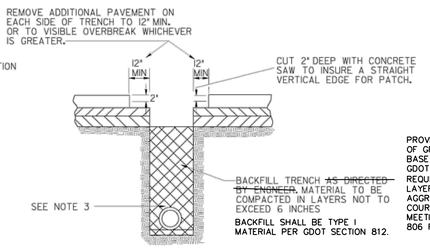

STAGE 2

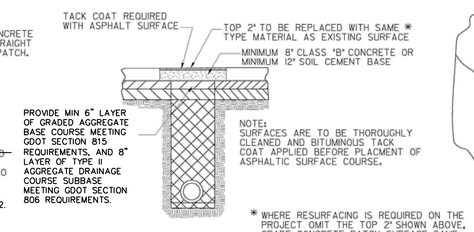

STAGE 3

* WHERE RESURFACING IS REQUIRED ON THE PROJECT OMIT THE TOP 2" SHOWN ABOVE, GRADE CONCRETE PATCH SURFACE SAME AS EXISTING SURFACE, WITH THE RESURFACING OVERLAY BEING STAGE 4.

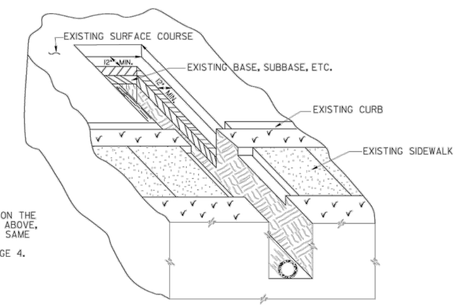

STORM DRAIN AND UTILITY INSTALLATION BY OPEN CUT ACROSS P.C. CONCRETE PAVING

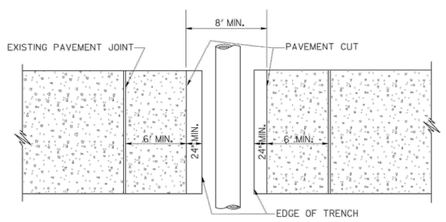

NORMAL CROSSING

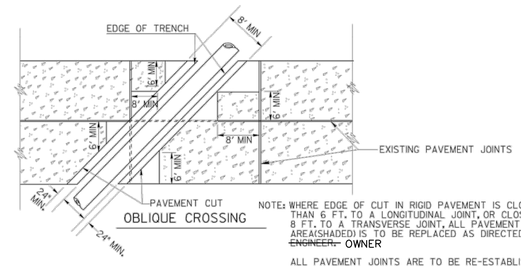

OBLIQUE CROSSING

NOTE: WHERE EDGE OF CUT IN RIGID PAVEMENT IS CLOSER THAN 6 FT. TO A LONGITUDINAL JOINT, OR CLOSER THAN 8 FT. TO A TRANSVERSE JOINT, ALL PAVEMENT IN THAT AREA(SHADED) IS TO BE REPLACED AS DIRECTED BY THE ~~ENGINEER.~~ OWNER

ALL PAVEMENT JOINTS ARE TO BE RE-ESTABLISHED.

DOWELS AND TIE-BARS ARE TO BE REPLACED.

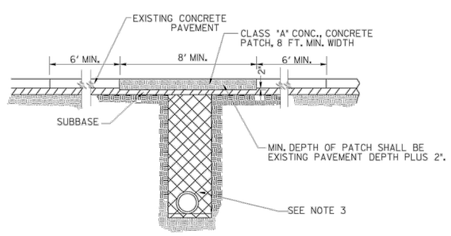

NOTE:
WHEN THE CONCRETE IS POURED, IT SHALL BE STRUCK OFF AT AN ELEVATION SLIGHTLY HIGHER THAN THE INTENDED SURFACE AND TAMPED TO OFFSET SHRINKAGE. MECHANICAL VIBRATING EQUIPMENT SHALL BE USED TO CONSOLIDATE THE PLACED CONCRETE, ESPECIALLY AT THE EDGES AND AROUND THE STEEL AT JOINTS. THE CONCRETE SHALL THEN BE TAMPED A SECOND TIME, THEN SCREEDED AND CHECKED WITH A STRAIGHT EDGE TO GIVE THE SAME SURFACE GRADE AS THE EXISTING PAVMENT.

GENERAL NOTES:

1. SPECIFICATIONS: GEORGIA STANDARD, CURRENT EDITION & SUPPLEMENTS THERETO.
2. (a)OTHER PAVEMENT REPLACEMENT MATERIALS, SUCH AS HIGH EARLY STRENGTH CONCRETE, MAY BE SUBSTITUTED FOR MATERIALS SHOWN WHEN CALLED FOR IN THE PLANS OR BY THE ENGINEER.
   (b)PAYMENT FOR PIPE CULVERT OR UTILITY SHALL INCLUDE SAWING AND/OR CUTTING AND REMOVING EXISTING PAVEMENT AND REPLACING THE PAVEMENT AS SPECIFIED. PAYMENT FOR PIPE OR UTILITY INCLUDES THIS PAVEMENT REPLACEMENT MATERIAL, REGARDLESS OF WHERE MATERIALS SHOWN ARE USED OR WHERE OTHER MATERIALS SUCH AS HIGH EARLY STRENGTH CONCRETE ARE USED.
   (c)PAYMENT FOR PIPE CULVERT OR UTILITY INSTALLATION SHALL INCLUDE REPLACING IN KIND ANY PORTIONS OF SIDEWALK, CURB, CURB & GUTTER, MEDIAN PAVING, DRIVEWAYS, ETC., WHICH ARE DISTURBED DUE TO THE INSTALLATION.
3. TRENCH DETAIL SHOWN IS GENERAL, SEE STANDARD 1030D FOR DETAILS REQUIRED FOR PIPE CULVERT INSTALLATIONS. SEE THE UTILITIES MANUAL FOR UTILITY INSTALLATION REQUIREMENTS.
4. AFTER REMOVING EXISTING PAVEMENT, THE SUBBASE AND VERTICAL FACE OF EXISTING PAVING SHALL BE DAMPED (BUT NOT WET). ADDITIONALLY, THE VERTICAL FACE OF THE EXISTING PAVEMENT SHALL BE PAINTED WITH A SOLUTION OF PORTLAND CEMENT AND WATER MIXED TO THE CONSISTENCY OF HEAVY PAINT. THE CONCRETE MIX SHALL THEN BE POURED BEFORE THIS SURFACE DRIES OUT. AFTER CONCRETE IS POURED, IT SHALL BE WORKED INTO ALL CORNERS AND INTO ALL ROUGH SURFACES OF THE EXISTING PAVEMENT.
5. WHERE PIPE IS REMOVED, BUT NOT REPLACED, PAYMENT FOR PIPE REMOVAL INCLUDES ALL ITEMS DESCRIBED IN GENERAL NOTE 2., WITH ALL OTHER NOTES AND DETAILS ALSO BEING APPLICABLE.

NOTE:
THIS STANDARD IS FOR USE WHERE PERMANENT PAVEMENT PATCHING IS REQUIRED. TEMPORARY PATCHING, IF REQUIRED, SHALL BE ACCORDING TO OTHER DETAILS, SPECIFICATIONS, AND/OR AS DIRECTED BY THE ENGINEER.

	DATE	DEPARTMENT OF TRANSPORTATION STATE OF GEORGIA	
	REVISION	STANDARD PAVEMENT PATCHING DETAILS (STORM DRAIN OR UTILITY INSTALLATIONS BY OPEN CUT ACROSS EXISTING PAVEMENT)	
		NO SCALE — REV. & REDR., AUG. 1999	
	BY	REV. ____ TRA. ____ CHK. ____ (SUBMITTED) STATE ROAD & AIRPORT DESIGN ENGR. (APPROVED) CHIEF ENGINEER	NUMBER 1401

ISSUED FOR BID

Freese and Nichols, Inc.
Georgia Registered Engineering Firm PEF-004433

GEORGIA REGISTERED PROFESSIONAL ENGINEER No. 035916239 Tom Gray THOMAS MARSHALL GRAY

11/16/2021

FREESE AND NICHOLS
360 Interstate North Parkway, Suite 250
Atlanta, GA 30339
Phone - (404) 334-4310
Web - www.freese.com

CITY OF CLAYTON
OLD US-441 CULVERT REPLACEMENT
CIVIL
CULVERT DETAILS IV

NO.	ISSUE	BY	DATE
0	ISSUE FOR BID	TMG	11/11/2021

FAN/JOB NO. CYG20163
DATE NOV 2021
DESIGNED KKP
DRAWN KKP
REVISED
CHECKED WRH
FILE NAME CV-DTLS-1.dwg

VERIFY SCALE 0 1 Bar is one inch on original drawing. If not one inch on this sheet, adjust scale.

SHEET C-5
SEQ. .

ACAD Rel: 24.0s (LMS Tech)
Filename: T:\2.0 STUDY\2.06 Old US-441 Culvert Replacement\DWG\Plan Sheets\CV-DTLS-1.dwg
Last Saved: 11/11/2021 10:40 AM Saved By: 03826
Plot Date: 11/11/2021 1:07 PM Plot By: 03826 Filename: T:\2.0 STUDY\2.06 Old US-441 Culvert Replacement\DWG\Plan Sheets\CV-DTLS-1.dwg

ACAD Rel: 24.0s (LMS Tech)
Filename: T:\2.0 STUDY\2.06 Old US-441 Culvert Replacement\DWG\Plan Sheets\CV-DTLS-1.dwg
Last Saved: 11/11/2021 10:40 AM Saved By: 03826
Plot Date: 11/11/2021 1:07 PM Plot By: 03826 Filename: T:\2.0 STUDY\2.06 Old US-441 Culvert Replacement\DWG\Plan Sheets\CV-DTLS-1.dwg
DocuSign Envelope ID: F2582EB-ED7E-4FC1-A774-8E5C8362AFE0

STATE	PROJECT NUMBER	SHEET NO.	TOTAL SHEETS
GA.			

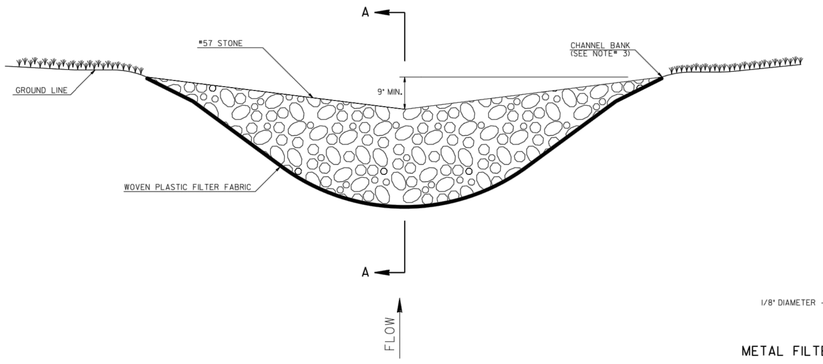

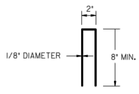

METAL FILTER FABRIC STAPLE

SECTION A-A

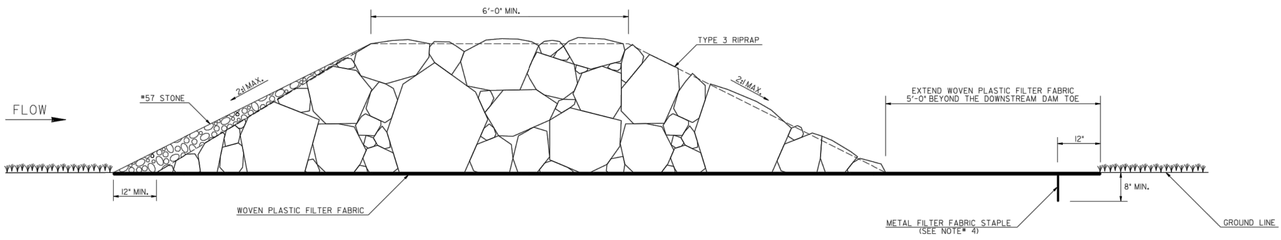

GENERAL NOTES:

1. THE MAXIMUM DRAINAGE AREA TO A ROCK FILTER DAM SHALL BE 50-ACRES.
2. ROCK FILTER DAMS SHALL NOT BE INSTALLED IN STATE WATERS.
3. THE ROCK FILTER DAM SHOULD NOT BE HIGHER THAN THE CHANNEL BANKS OR ADVERSELY IMPACT UPSTREAM PROPERTY OR STATE WATERS WITH BACKWATER. THE CENTER OF THE ROCK FILTER DAM SHOULD BE AT LEAST 9-INCHES LOWER THAN THE OUTER EDGES OF THE ROCK FILTER DAM AT THE CHANNEL BANKS.
4. ANCHOR THE WOVEN PLASTIC FILTER FABRIC TO THE GROUND SURFACE WITH METAL FILTER FABRIC STAPLES 12-INCHES FROM THE EDGE AND NO GREATER THAN 12-INCHES APART.
5. REMOVE SEDIMENT WHEN IT REACHES ONE-HALF THE HEIGHT OF THE ROCK FILTER DAM. WOVEN PLASTIC FILTER FABRIC SHALL BE REPLACED WHEN DAMAGED OR DETERIORATED.

PAY ITEMS:
163-0540 CONSTRUCT AND REMOVE ROCK FILTER DAM (EA)
165-0110 MAINTENANCE OF ROCK FILTER DAM (EA)

DATE	REVISION	BY

DEPARTMENT OF TRANSPORTATION
STATE OF GEORGIA

CONSTRUCTION DETAILS
ROCK FILTER DAM

NO SCALE 4-22-2016

NUMBER D-43

STATE	PROJECT NUMBER	SHEET NO.	TOTAL SHEETS
GA.			

TYPICAL FLOATING AND STAKED TURBIDITY CURTAIN MATERIAL

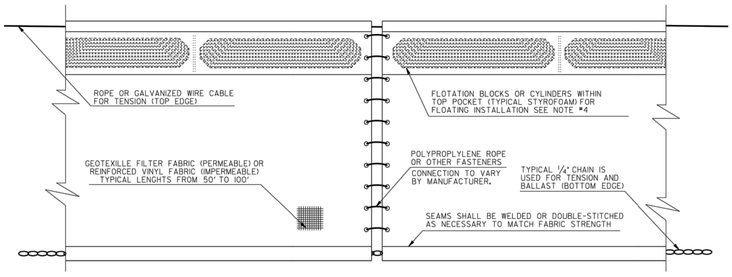

TYPICAL FLOATING CONSTRUCTION LAYOUT DETAIL

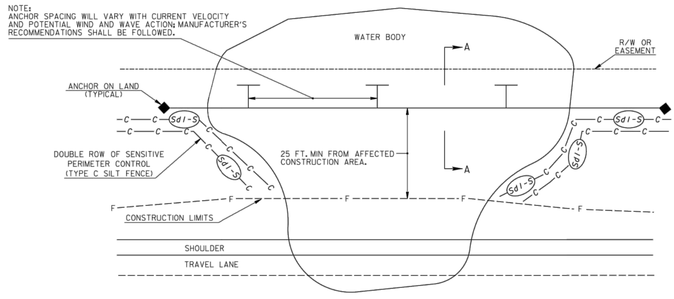

SECTION A-A

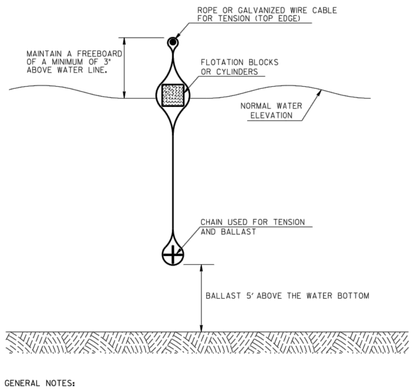

SECTION B-B

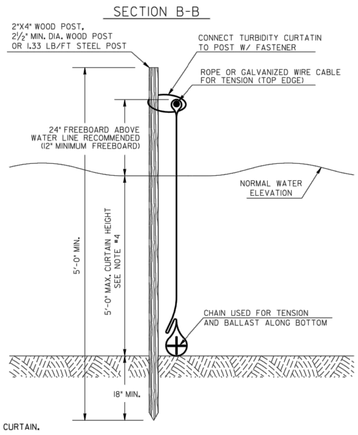

TYPICAL STAKED CONSTRUCTION LAYOUT DETAIL

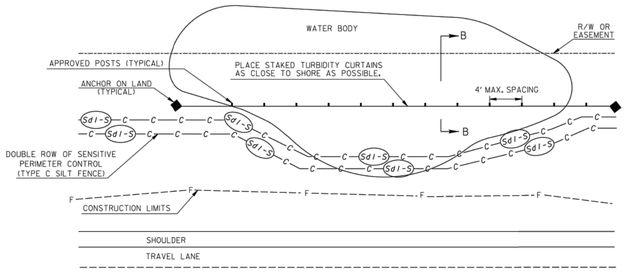

GENERAL NOTES:

1. TURBIDITY CURTAINS ARE ALSO KNOWN AS A FLOATING BOOM, SILT RETENTION BARRIER, OR SILT CURTAIN.
2. REFER TO STANDARD SPECIFICATIONS 165 AND 170 AND SUPPLEMENTS THERETO.
3. TURBIDITY CURTAINS SHOULD ONLY BE USED WHEN PERMITTED FILL IS BEING PLACED INTO A WATER BODY OR AS A SUPPLEMENT TO ADEQUATELY PLACED PERIMETER BMPs TO ALLOW SEDIMENT TO DROP OUT OF SUSPENSION AND REMAIN WITHIN THE CONSTRUCTION AREA.
4. FLOATING TURBIDITY CURTAIN TYPICAL FLOTATION BLOCKS OR CYLINDERS SHOULD HAVE A MINIMUM END AREA OF 49 SQUARE INCHES. HOWEVER, SIZE AND BUOYANCY REQUIREMENTS DEPEND ON WEIGHT AND CURTAIN HEIGHT.

   STAKED TURBIDITY CURTAINS SHOULD BE LIMITED TO 5 FEET UNLESS DIRECTED.
5. THE CONTRACTOR SHALL FOLLOW THE MANUFACTURER'S RECOMMENDATION AND GUIDELINES FOR INSTALLATION OF TURBIDITY CURTAINS.

PAY ITEMS:
170-1000 FLOATING SILT RETENTION BARRIER (LF)
170-2000 STAKED SILT RETENTION BARRIER (LF)
165-0050 MAINTENANCE OF SILT RETENTION BARRIER (LF)

DATE	REVISION	BY

DEPARTMENT OF TRANSPORTATION
STATE OF GEORGIA

CONSTRUCTION DETAIL
TURBIDITY CURTAIN
(SILT RETENTION BARRIER)
FLOATING OR STAKED

NO SCALE 4-22-2016

DES. ____
DRW. ____
TRA. ____
CHK. ____

NUMBER D-51

ISSUED FOR BID

SEQ.	SHEET	NO.	ISSUE	BY	DATE
.	C-6	0	ISSUE FOR BID	TMG	11/11/2021

F&N JOB NO. CYG20163
DATE NOV 2021
DESIGNED KKP
DRAWN KKP
REVISED
CHECKED WRH

VERIFY SCALE 0 1 — Bar is one inch on original drawing. If not one inch on this sheet, adjust scale.

FILE NAME CV-DTLS-1.dwg

CITY OF CLAYTON

OLD US-441 CULVERT REPLACEMENT

CIVIL

EROSION CONTROL DETAILS I

FREESE AND NICHOLS
360 Interstate North Parkway,
Suite 250
Atlanta, GA 30339
Phone - (404) 334-4310
Web - www.freese.com

Freese and Nichols, Inc.
Georgia Registered Engineering Firm PEF-004433

GEORGIA REGISTERED PROFESSIONAL ENGINEER No. 34433 Tom Gray MARSHALL GRAY
11/16/2021